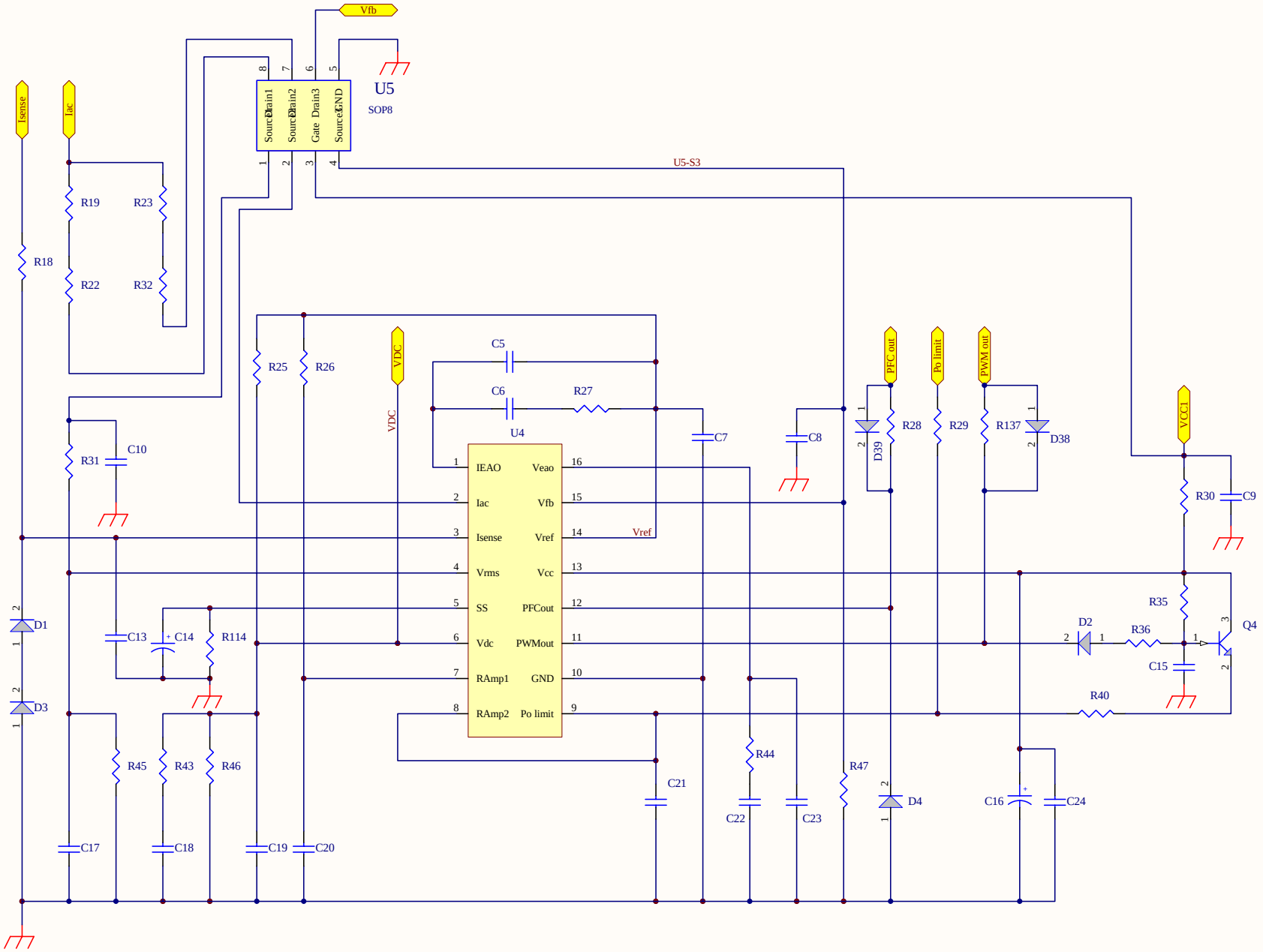


| | | |
|---|---|---|
| Title | CHANNEL WELL TECHNOLOGY CO.,LTD | |
| Size A3 | Number DSA2XY CARD1 | Revision 0.1 |
| Date: 2010/3/18 | Sheet of | |
| File: D:\AD(0811)\..\DSA2-CARD1-R01(0318).SchDoc | Drawn By: | |